FZM series

Maximum working pressure up to 32 Mpa (320 bar) - Flow rate up to 70 l/min

INSTALLATION, SERVICE AND MAINTENANCE MANUAL AND SAFETY INSTRUCTIONS

Please scan or click the QR codes
to get updated electronic version
of the related document.

Scan or click me!

FZM GENERAL INFORMATION

Description

Stainless steel high pressure filters

Manifold
Maximum working pressure up to 32 Mpa (320 bar)
Flow rate up to 70 l/min

FZM is a range of stainless steel high pressure filter for protection of sensitive components in high pressure hydraulic systems placed in difficult environmental conditions.
They are directly connected to the top of the manifold, through the proper flanged interface.

Available features:

- Manifold connections up to Ø15 mm, for a maximum flow rate of 70 l/min
- ISO 4401 CETOP 3 and CETOP 5 interface, for direct mounting on the CETOP valves.
- Fine filtration rating, to get a good cleanliness level into the system
- Bypass valve, to relieve excessive pressure drop across the filter media
- Low collapse filter element with external support "R", for filter element protection against the back pressure caused by the check valve or the reverse flow in filters provided with the bypass valve
- High collapse filter element with external support "S", for filter element protection against the back pressure caused by the check valve or the reverse flow in filters not provided with the bypass valve
- High collapse filter element "U", for use with aggressive fluids
- Visual, electrical and electronic differential clogging indicators

Common applications:

- Off-shore equipment
- Water filtration systems
- Systems with strong or corrosive environmental conditions
- Systems with corrosive fluids

Technical data

Filter housing materials

- Head: AISI 316L
- Housing: AISI 316L
- Bypass valve: AISI 316L

Pressure

- Test pressure: 48 MPa (480 bar)
- Min. Burst pressure: 96 MPa (960 bar)
- Pulse pressure fatigue test: 1 000 000 cycles with pressure from 0 to 32 MPa (320 bar)

Bypass valve

Opening pressure 6 bar ±10%

Filter element features

Filter	Filter element
FZM	HP

Δp Element type			
Element media	**Construction**	**Δp Series**	**Δp**
A - Microfiber	with external support	R	20 bar
	High Δp with external support	S	210 bar
	High Δp with stainless steel components	U	210 bar

Please see ordering code tables to check element Δp series availability based on filter features.

Flow direction through the filter element:
From OUT to IN

Filter element components materials	Δp Series		
	R	S	U
End cap	Polyamide	Tinned Steel	Stainless steel
Core tube	Tinned Steel	Tinned Steel	Stainless steel
External support	Wire mesh epoxy painted	Wire mesh epoxy painted	Stainless steel
Internal support	Wire mesh epoxy painted	Stainless steel	Stainless steel
Pre-filter	Synthetic	Synthetic	Synthetic

Seals

- Standard NBR series A (-25 °C to +110 °C)
- Optional FPM series V (-20 °C to +120 °C)
- Optional MFQ series F (-50 °C to +120 °C)

Temperature

From -50 °C to +120 °C

Note

FZM filters are provided for vertical mounting

Weights [kg] and volumes [dm³]

Filter series	Weights [kg]					Volumes [dm³]				
	Length	1	2	3	4	Length	1	2	3	4
FZM 039		-	5.0	5.6	6.1		-	0.19	0.26	0.34

Flow rates [l/min]

		Filter element design - R Series					Filter element design - S-U Series				
Filter series	Length	A03	A06	A10	A16	A25	A03	A06	A10	A16	A25
	2	19	25	41	47	54	19	23	39	43	51
FZM 039	**3**	33	36	50	56	65	30	33	45	49	60
	4	41	44	58	64	70	37	39	51	63	68

Maximum flow rate for a complete stainless steel high pressure filter with a return drop Δp = 1.5 bar.
The reference fluid has a kinematic viscosity of 30 mm^2/s (cSt) and a density of 0.86 kg/dm^3.
For different pressure drop or fluid viscosity we recommend to use our selection software available on www.mpfiltri.com.
You can also calculate the right size using the formulas present on the FILTER SIZING paragraph at the beginning of the full catalogue or at the beginning of the filter family brochure.
Please, contact our Sales Department for further additional information.

Hydraulic diagram

Filter series	Style S	Style B
FZM 039	•	•

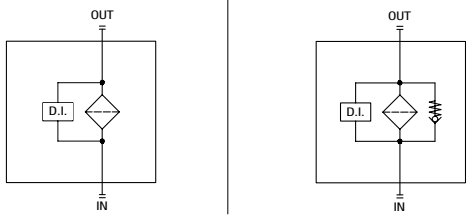

Pressure drop

Filter housings Δp pressure drop

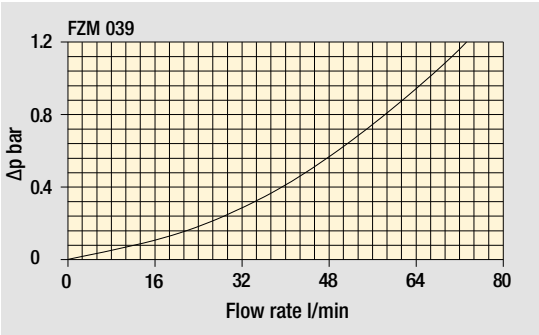

The curves are plotted using mineral oil with density of 0.86 kg/dm^3 in compliance with ISO 3968. Δp varies proportionally with density.

Designation & Ordering code

COMPLETE FILTER

Configuration example: FZM039 | 2 | S | A | M | 1 | A10 | H | P01

Series and size
FZM039

Length
2 | **3** | **4** |

Bypass valve
S Without bypass
B With bypass 6 bar

Seals
A NBR
V FPM
F MFQ

Connections
M Manifold

Connection for differential pressure indicator
1 Without connection
2 With connection

Filtration rating (filter media)
A03 Inorganic microfiber 3 µm
A06 Inorganic microfiber 6 µm
A10 Inorganic microfiber 10 µm
A16 Inorganic microfiber 16 µm
A25 Inorganic microfiber 25 µm

Element Δp		Valves S	Valves B
R	20 bar	-	•
S	210 bar	•	-
U	210 bar, stainless steel filter element	•	•

Execution
P01 MP Filtri standard
Pxx Customized

FILTER ELEMENT

Configuration example: HP039 | 3 | A10 | A | S | P01

Element series and size
HP039

Element length
2 | **3** | **4** |

Filtration rating (filter media)
A03 Inorganic microfiber 3 µm
A06 Inorganic microfiber 6 µm
A10 Inorganic microfiber 10 µm
A16 Inorganic microfiber 16 µm
A25 Inorganic microfiber 25 µm

Seals
A NBR
V FPM
F MFQ

Element Δp
R 20 bar
S 210 bar
U 210 bar, stainless steel filter element

Execution
P01 MP Filtri standard
Pxx Customized

CLOGGING INDICATORS

See page 787

DEX Electrical differential pressure indicator
DLX Electrical/visual differential pressure indicator
DVX Visual differential pressure indicator
DVY Visual differential pressure indicator

PLUGS

See page 807

X2 Stainless steel plug (not included)

FZM039	
Filter length	**H [mm]**
2	160
3	203
4	247

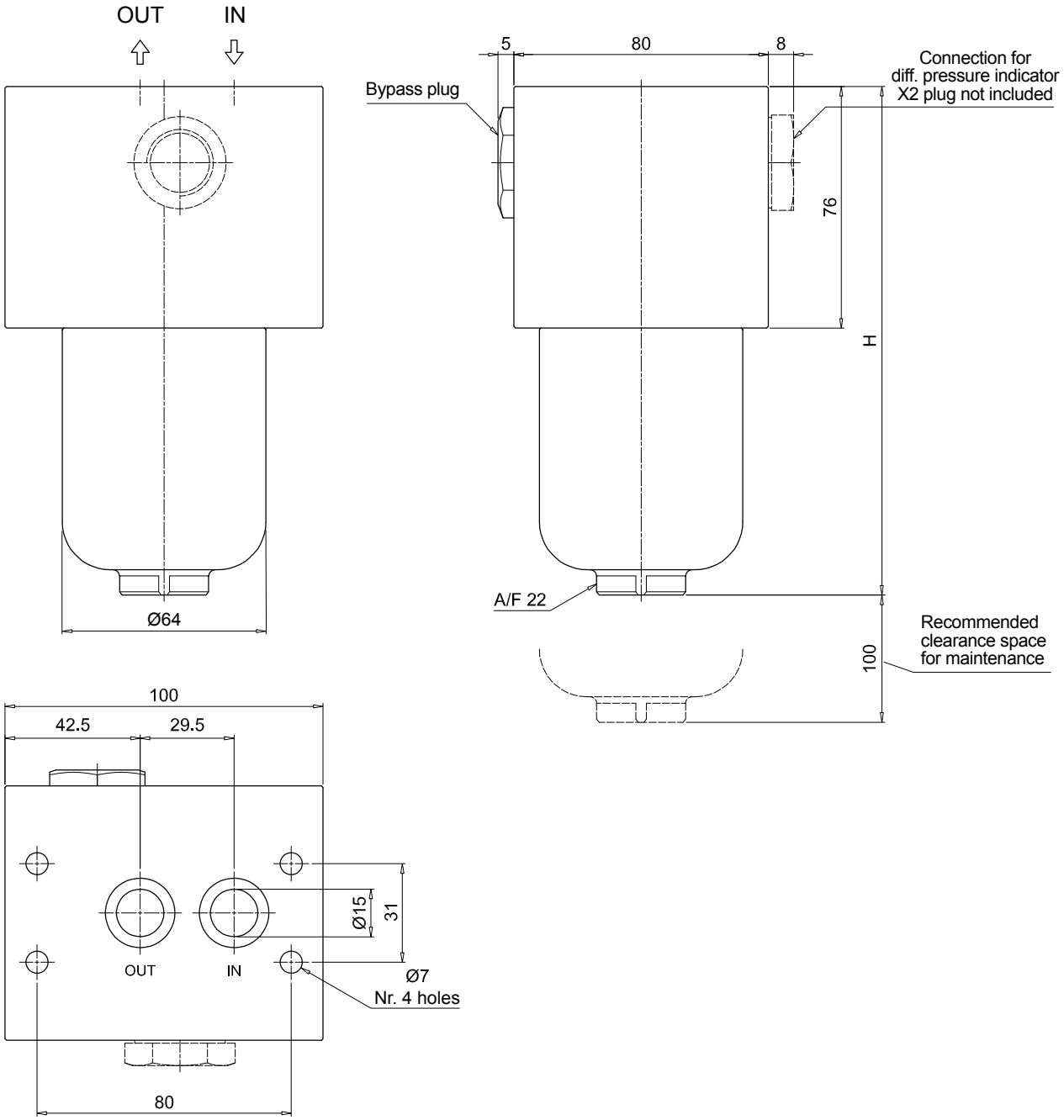

Order number for spare parts

FZM 039

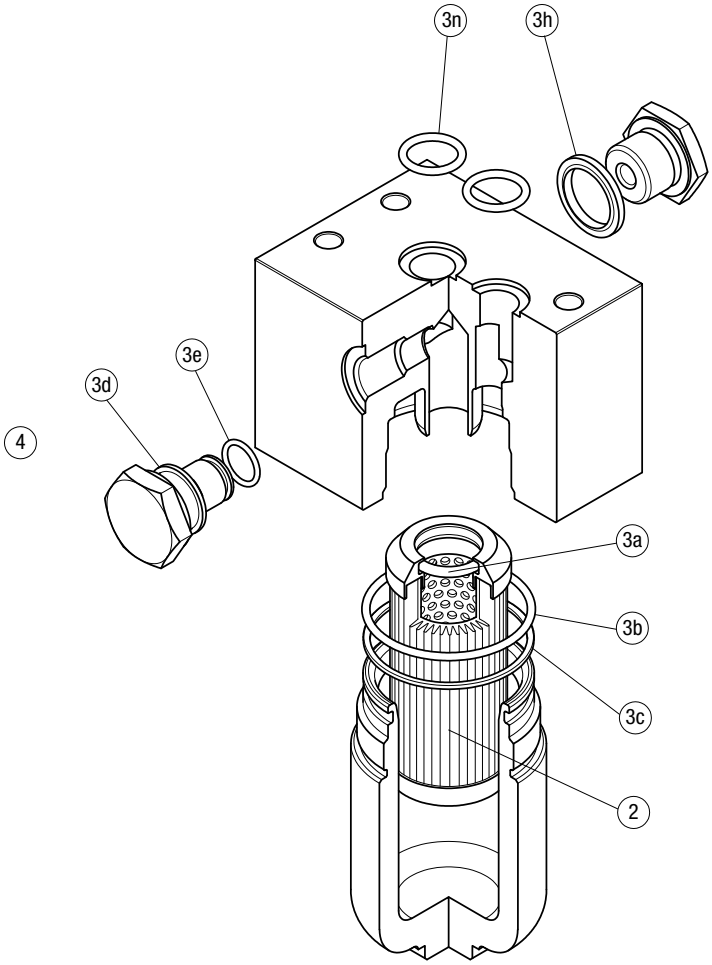

	Q.ty: 1 pc.	Q.ty: 1 pc.		Q.ty: 1 pc.	
Item:	2	3 (3a ÷ 3n)		4	
Filter series	**Filter element**	**Seal Kit code number NBR**	**FPM**	**Indicator connection plug NBR**	**FPM**
FZM 039	See order table	02050651	02050652	X2H	X2V