LMC/LDC series

IEC electric motor range from size 80 up to size 355

Bell-Housings & Couplings sizing

	p.
AUTOMATIC	11
MANUALLY	12

SOFTWARE FOR AUTOMATIC CALCULATION

The web-based software program will allow you to select the most suitable MP Filtri's Filters, in accordance with your process design requirements.

The program will automatically check your input design process prior to propose you the acceptable solutions and create an output in PDF report style format.

The MP Filtri Selection Tool software program is easy to use with a flexible fast design method and provides improved layout formats with full descriptions.

The web-based tool is available at MP Filtri website at following link:
https://www.mpfiltri.com/tools/

The related, complete user guide is available as Manual and downloadable from the "Download" section of MP Filtri website, as well as scanning the following QR code

Scan or click me!

BELL-HOUSINGS & COUPLINGS SIZING

A GUIDE TO SELECT THE CORRECT BELL-HOUSING AND DRIVE COUPLING MANUALLY

DATA REQUIRED

- Electric motor power/motor size
- Manufacturer and pump type

TO VERIFY:

1 - Pump and motor shaft dimensions (see electric motor data sheet)
2 - Shaft and flange pump (see pump data sheet)

Example:
- Electric motor 2.2 kW - size 100-112
- Atos pump code PFE31 - Shaft 1

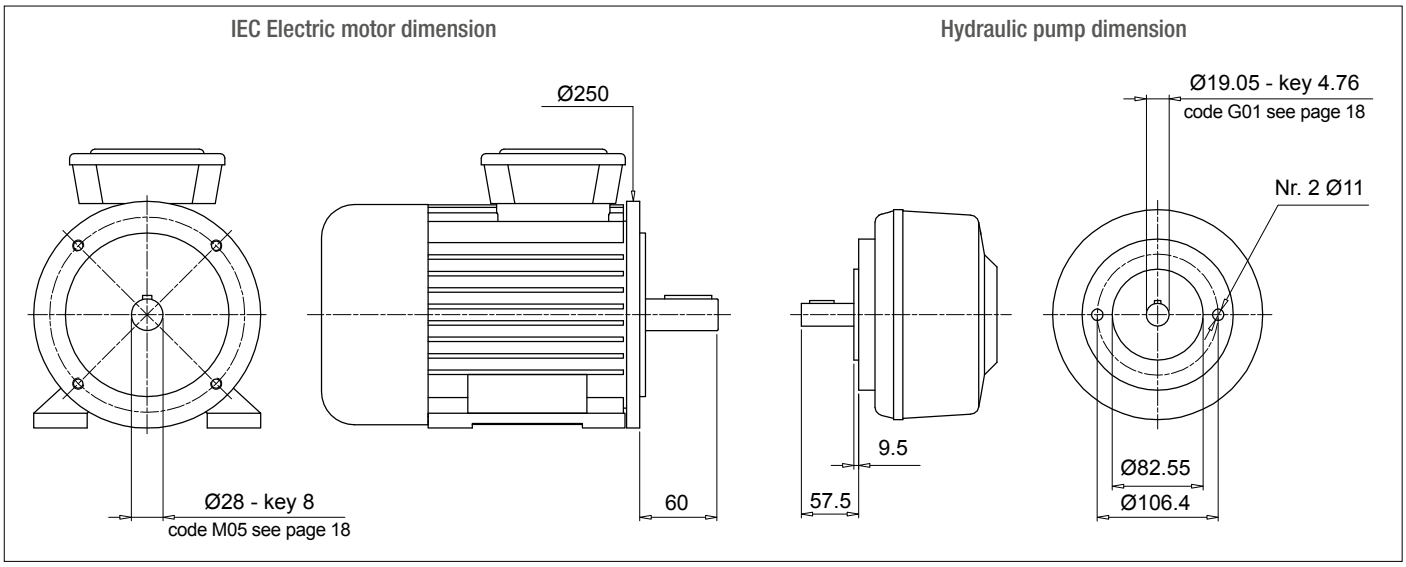

Bell-Housing's length calculation

- H = 60 + 18 + 57.5 = 135.5 mm (18 = Sp spider - see page 31)

- Choose type of bell-housing (LMC - LMS):
  For monobloc bell-housing LMC/LDC series see pages 75 ÷ 81
  For Low noise bell-housing LMS/LDS series see pages 81 ÷ 89
  For Multi-components 2-3 bell housing series see pages 91 ÷ 111

Note:
The length of bell-housing must be ≥ than the length calculated (135.5 mm)

Case A
Solution with monobloc bell-housing series **LMC/LDC**

Pages 75 ÷ 81 for IEC Electric motor size 100-112 - LMC250

LMC 250 bell-housing with height ≥ 135.5 - LMC250AFSQ

The bell-housing code must be completed with pump drilling code (see pages 60-61).
For the specific case:
Spigot hole 82.55 - PCD 106.4 - Nr.2 holes M10 : Drilling code 060

Definitive bell-housing code **LMC250AFSQ060**

Case B
Solution with low noise bell-housing series **LMS/LDS**

Pages 83 ÷ 89 for IEC Electric motor size 100-112 - LMS250

LMS 250 bell-housing with height ≥ 135.5 - LMS250AFSA

The bell-housing code must be completed with pump drilling code (see pages 60-61).
For the specific case:
Spigot hole 82.55 - PCD 106.4 - Nr.2 holes M10 : Drilling code 060

Definitive bell-housing code **LMS250AFSA060**

Coupling selection

Motor half-coupling (see page 26)
For IEC Electric motor size 100/112, the half-coupling is **SGEA21M05060**

Spider (see page 31)
For SGEA21, EGE2 - EGE2RR
(choose spider material on the base of the application, oil, temperature and cycle machine, etc.)

Pump half-coupling
Choose the drilling code - see pages 18-19 for shaft 19.05 - key 4.76 - code: **G01**

Pump half-coupling length = BH length - THK Spider - THK Spigot
LMC = 138 mm - 60 - 18 - 9.5 = 50.5 mm
LMS = 148 mm - 60 - 18 - 9.5 = 60.5 mm

LMC - Choose the half-coupling's length at page 26 ≤ 50.5 mm.
LMS - Choose the half-coupling's length at page 26 ≤ 60.5 mm.
LMC - Available length for SGEA21 = 50 mm
LMS - Available length for SGEA21 = 60 mm
Half coupling for LMC: **SGEA21G01050**
Half coupling for LMS: **SGEA21G01050**

Note: for multi pumps we recommend to use a specific support on the base of the pump's dimensions and weight.

Noise is a particularly pervasive problem so much so that there have been statutory regulations in place now for some years, designed to limit harmful occupational exposure.
Many of the machines used in industry today are equipped with oil-hydraulic systems, which happen to be a major source of noise.

1 THEORY AND DEFINITION OF NOISE

From a health and hygiene standpoint, noise can be defined as an unpleasant and undesirable sound, or an unpleasant and annoying or intolerable auditory sensation (noise being any sound phenomena that may be accompanied by sensations of disturbance and pain). By definition, acoustic phenomena are oscillatory in character, propagated in a flexible medium and causing pressure variations at the points, and the areas adjacent to those points, through which they pass.

2 SOUND

Technically considered, certain elements must be present simultaneously for acoustic phenomena to occur:

- Sound source
- Transmission medium
- Receive

The electric motor and the pump, together with the drive coupling, are the SOURCE OF THE NOISE. The Bell-housing is the noise transmission MEDIUM. Depending on whether the monobloc bell-housing is a rigid or low noise type, there will be variations in the flexible properties of the transmission medium. The acoustic phenomena are dissimilar in the two cases, given the differences in pressure variation and particle displacement.

MOTOR AND PUMP UNIT

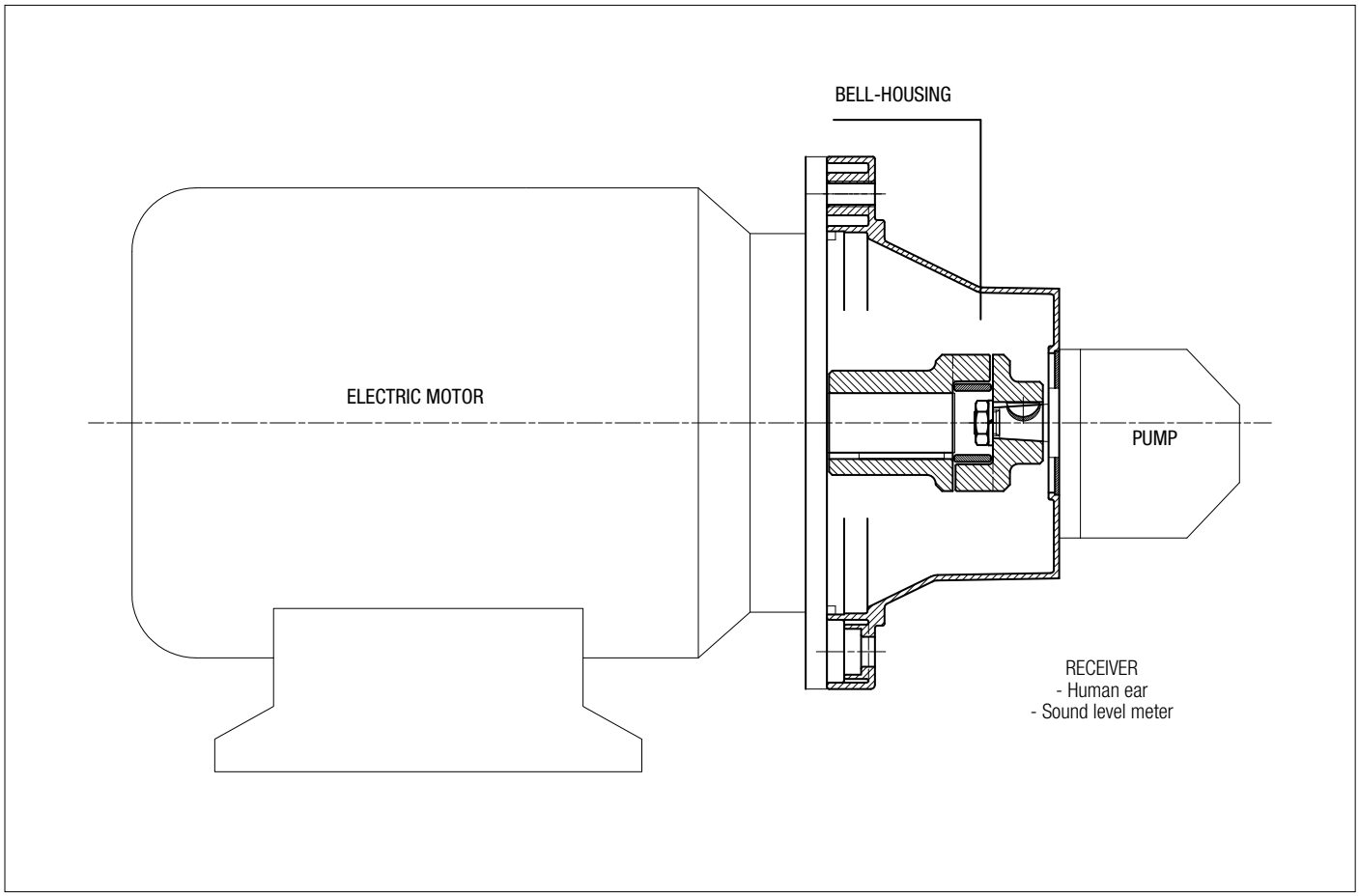

Low noise bell-housing will help to attenuate the transmission of vibrations and the emission of noise generated by the system.
Self-evidently, however, the mere adoption of a low noise bell-housing will achieve little unless the motor and pump are correctly installed on the machine or on the tank of the hydraulic power unit.

Should be followed in order to achieve best possible results and correct installation:

1 MOTOR AND PUMP UNIT MOUNTED HORIZONTALLY ON OIL TANK LID

- The suction pipe attached to the pump must be rigid and fitted using a resilient bulkhead flange of the FTA series, which helps to cushion the vibrations propagated between the pipe and the tank lid.
  If pipes need to be bent, the radius of curvature must be at least 3 times the pipe diameter.
  Do not use elbow fittings, as these will significantly increase pressure losses.

- The pressure pipeline of the pump must be flexible and long enough to include bends with the minimum radius of curvature recommended by the manufacturer for the specified operating pressure.

- The return pipeline running from the service to the filter must be flexible.
  Where oil is returned directly to the tank of the hydraulic power unit through a rigid pipe, it is advisable to use a resilient bulkhead flange of the FTR series, which helps to cushion the vibrations propagated between the pipe and the tank lid.

- Anti-vibration devices (resilient mounts or damping rods) must be located under the feet of the electric motor or the PDM foot brackets, depending on the mounting position of the motor.

- The lids of hydraulic oil tanks must be sturdy enough to support the load they carry.

2 MOTOR AND PUMP UNIT MOUNTED HORIZONTALLY ON MACHINE

- As a matter of good practice, the oil tank and motor-pump unit should be mounted on a single supporting frame of strength sufficient to support the load.

- If the hydraulic system is fitted with a side-mounted filter, the suction pipeline to the pump must be flexible and long enough to include bends with the minimum radius of curvature recommended by the manufacturer.

- If the suction filter is not side mounted, the pipeline should be rigid and installed in conjunction with a compensating coupling.

- The pressure pipeline of the pump must be flexible, and long enough to include bends with the minimum radius of curvature recommended by the manufacturer for the specified operating pressure.

- The return pipeline running from the service to the filter must be flexible.
  Where oil is returned directly to the tank of the hydraulic power unit through a rigid pipe, it is advisable to use a resilient bulkhead flange of the FTR series, which helps to cushion the vibrations propagated between the pipe and the tank lid.

- Anti-vibration devices (resilient mounts or damping rods) must be located under the feet of the electric motor or the PDM foot brackets, depending on the mounting position of the motor.

FINAL CONSIDERATION

For best results, in any event, the motor-and-pump unit should be incorporated into the hydraulic system in such a way that no one component is rigidly associated with another, resulting in the propagation of vibration, and consequently noise.

RECOMMENDED TIGHTENING TORQUES FOR MOTOR/PUMP FIXING ON THE BELL-HOUSING

M6	10 N·m	M16	205 N·m
M8	15 N·m	M18	280 N·m
M10	50 N·m	M20	400 N·m
M12	84 N·m	M22	530 N·m
M14	135 N·m	M24	690 N·m

Note: The above guidelines are indicative only and subordinate to the solutions adopted ultimately by design engineers.

Valid configuration for bell-housing up to Ø400

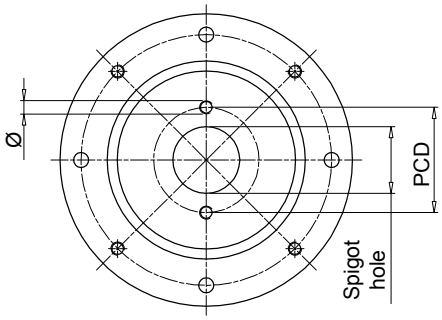

Bell-housing with nr. 2 holes at pump interface, aligned with through holes at motor interface.

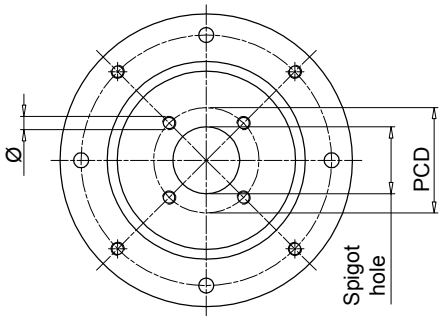

Bell-housing with nr. 4 holes at pump interface, aligned with thread holes at motor interface.

Valid configuration for bell-housing from Ø450 to Ø660

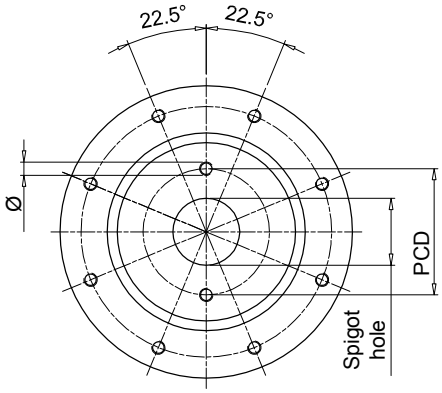

Bell-housing with nr. 2 holes at pump interface + 22.5° compared to through holes at motor interface.

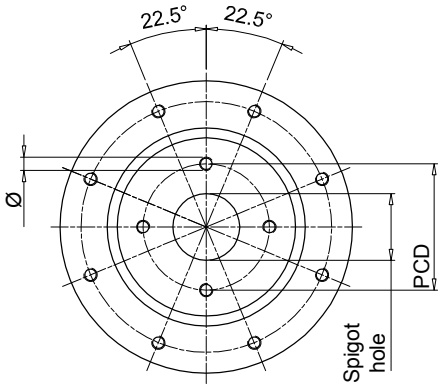

Bell-housing with nr. 4 holes at pump interface + 22.5° compared to thread holes at motor interface.

Spigot hole [mm]	PCD	Ø	Nr. holes	Code	Type
40	72.00	M8	2	**191**	-
45.2	88.90	M8	4	**096**	-
	71.80	M8	4	**120**	-
50	80.00	M8	2	**052**	ISO3019-2-50-B2
	93.00	M10	2	**053**	-
	60.00	M5	4	**280**	-
	63.00	Ø7	4	**057**	-
	93.00	M8	2	**287**	-
50.8	82.50	M8	2	**050**	SAE A-A 50-2
56	76.00	M6	4	**234**	-
57.15	106.40	Ø11	2	**212**	-
60	74.00	M10	4	**098**	-
	98.50	M6	4	**147**	-
	75.00	M6	4	**227**	-
62.7	157.20	M12	4	**231**	-
63	100.00	M8	2	**042**	ISO3019-2-63-B2
	125.00	M6	4	**043**	-
	85.00	M8	4	**044**	-
	80.00	M8	2	**051**	-
	80.00	Ø8.5	4	**058**	-
	100.00	M10	2	**062**	-
	82.00	M8	4	**168**	ISO3019-2-63-B4
	90.00	M8	4	**271**	-
65	90.00	M8	4	**073**	-
70	84.00	Ø7	4	**289**	-
71.8	88.90	M10	4	**047**	-
75	102.00	M10	4	**139**	-
80	100.00	M8	4	**024**	ISO3019-2-80-B4
	103.20	M8	2	**045**	ISO3019-2-80-B2
	100.00	Ø11	4	**059**	-
	100.00	M10	2	**061**	-
	110.00	M10	2	**063**	-
	140.00	M10	2	**064**	-
	115.00	M10	2	**065**	-
	100.00	M10	4	**067**	-
	106.40	M10	2	**083**	-
	130.00	M8	4	**087**	-
	100.00	Ø8.5	4	**093**	-
	113.00	M12	4	**104**	-
	95.00	M8	4	**169**	-
	103.00	M8	4	**242**	-
	110.00	M10	4	**272**	-
82.55	106.40	M10	2	**060**	SAE A 82-2
	105.00	M10	4	**097**	-
	106.40	M8	2	**254**	-
	146.00	M12	2	**260**	-
	110.00	M10	2	**284**	-
85	106.40	M10	2	**066**	-
90	112.00	M8	2	**134**	-
	105.00	M8	4	**156**	-
	118.00	Ø9	2	**163**	-
	112.00	Ø9	2	**164**	-
92	140.00	M8	4	**088**	-
	145.00	M10	4	**089**	-

"-": configuration out of ISO & SAE Standard

Spigot hole [mm]	PCD	Ø	Nr. holes	Code	Type
95	115.00	M8	4	**137**	-
	127.00	M10	4	**131**	-
98.4	125.00	Ø11	4	**128**	-
100	125.00	M10	2	**023**	ISO3019-2-100-B4
	125.00	M10	4	**025**	ISO3019-2-100-B2
	125.00	Ø11	4	**031**	-
	125.00	M5	4	**032**	-
	190.00	Ø15	4	**038**	-
	125.00	Ø13	4	**041**	-
	125.00	M12	2	**071**	-
	140.00	M12	2	**072**	-
	146.00	M12	2	**075**	-
	126.00	M10	2	**106**	-
	120.00	M8	4	**122**	-
	160.00	M10	4	**141**	-
	150.00	M10	4	**150**	-
101.6	161.50	M12	4	**029**	-
	146.00	M12	2	**070**	SAE B 101-2
	127.00	M12	4	**125**	-
	146.00	M10	2	**159**	-
	127.00	M10	4	**224**	-
105	146.00	M12	2	**076**	-
110	175.00	M10	4	**110**	-
	130.00	M8	4	**154**	-
	200.00	M10	4	**202**	-
	135.00	M10	4	**219**	-
	145.00	M12	4	**273**	-
112	140.00	M12	2	**074**	-
	140.00	M10	2	**138**	-
	130.00	M10	4	**264**	-
115	180.00	M12	4	**198**	-
116	160.00	M14	2	**084**	-
120	210.00	M16	2	**094**	-
	145.00	M10	4	**155**	-
	150.00	Ø13	4	**267**	-
125	160.00	M12	4	**026**	ISO3019-2-125-B4
	160.00	Ø13	4	**033**	-
	160.00	M12	2	**079**	-
	180.00	M16	2	**082**	ISO3019-2-125-B2
	155.00	M10	4	**102**	-
	160.00	Ø17	4	**113**	-
	200.00	M12	4	**114**	-
	181.20	M16	2	**136**	-
	200.00	M16	4	**200**	-
	180.00	ø20	4	**215**	-
	170.00	ø18	4	**237**	-
127	161.50	M12	4	**021**	-
	181.20	M16	2	**080**	SAE C 127-2
	161.50	M14	4	**140**	-
130	165.00	Ø11	4	**054**	-
	150.00	M12	4	**068**	-
	181.20	M16	2	**085**	-
	165.00	M12	4	**124**	-
	165.00	M14	4	**135**	-

"-": configuration out of ISO & SAE Standard

Spigot hole [mm]	PCD	Ø	Nr. holes	Code	Type
130	165.00	M10	4	**253**	-
135	160.00	M10	4	**151**	-
	175.40	M12	4	**220**	-
140	180.00	M14	4	**077**	ISO3019-2-140-B4
	180.00	M12	2	**081**	-
	165.00	M10	4	**157**	-
	200.00	M16	4	**176**	ISO3019-2-140-B2
	165.00	Ø11	4	**223**	-
	180.00	M16	2	**232**	-
150	185.00	M16	4	**069**	-
152.4	228.60	M16	4	**022**	-
	228.60	M18	2	**090**	-
	228.60	M18	4	**108**	-
	217.50	Ø17	4	**118**	-
	228.60	M20	2	**166**	SAE D 152-2
	228.60	M20	4	**192**	SAE D 152 -4
	190.50	M8	4	**207**	-
160	200.00	M16	4	**027**	ISO3019 - 2 -160 B4
	200.00	Ø17	4	**035**	-
	200.00	M16	2	**091**	-
	224.00	M20	2	**092**	ISO3019 - 2 -160 B2
	200.00	M12	2	**107**	-
	230.00	M22	4	**111**	-
	185.00	M12	4	**152**	-
	224.00	M16	4	**184**	-
	230.00	Ø22	4	**228**	-
162	188.00	M12	4	**263**	-
165.1	317.35	M20	4	**143**	SAE E 165 - 4
	317.35	M24	2	**145**	SAE E 165 - 2
	229.00	M20	4	**201**	-
	317.35	M18	4	**204**	-
175	200.00	M12	4	**153**	-
	230.00	M18	2	**185**	-
177.8	350.00	M24	4	**146**	SAE F 177 - 4
	216.00	M12	4	**222**	-
	350.00	M24	2	**203**	SAE F 177 - 2
180	216.00	Ø13	4	**055**	-
	216.00	M16	4	**078**	-
	224.00	M16	4	**112**	ISO3019 - 2 -180 B4
	216.00	M12	4	**132**	-
	215.00	M22	4	**148**	-
	230.00	M22	4	**226**	-
200	250.00	M20	4	**028**	ISO3019 - 2 -200 B4
	250.00	Ø22	4	**095**	-
	280.00	M24	2	**117**	-
	230.50	M12	4	**214**	-
203.2	254.00	M14	4	**210**	-
205	240.00	M16	4	**133**	-
224	280.00	M20	4	**144**	ISO3019 - 2 -224 B4
	280.00	Ø22	4	**205**	-
250	310.00	M24	4	**238**	-
	315.00	M20	4	**282**	ISO3019 - 2 -250 B4
275	355.00	M16	4	**233**	-
	355.00	Ø18	4	**281**	-

"-": configuration out of ISO & SAE Standard

Technical data

Bell-Housing - IEC electric motor range from size 80 up to size 355

Materials
- Monobloc bell-housing: Pressure die-cast aluminium alloy
- Pump flange: Pressure die-cast aluminium alloy
- Screws kit: Steel
- Gaskets: Special paper (Guarnital)
- Plug for inspection: Polyamide

Temperature
From -30 °C to +80 °C

Note
For temperatures outside this range, contact MP Filtri Technical and Sales Department

Compatibility with fluids
Modular bell-housing components compatible for use with:
- Mineral oils types HH-HL-HM-HR-HV, to ISO 6743/4 standard
- Water based emulsions types HFAE-HFAS, to ISO 6743/4 standard
- Water glycol type HFC, to ISO 6743/4 standard: ask for anodized version

Special Applications
Any applications not covered by the normal indications contained in this catalogue must be evaluated and approved by MP Filtri Technical and Sales Department

Range

Bell-Housing size	Flange ISO 3019-2							IEC Motors size
	50 B2-B4	63 B2-B4	80 B2-B4	100 B2-B4	125 B2-B4	160 B2-B4	200 B2-B4	
LMC200	●	●	●	●				**IEC 80 Ø200 - Ø19x40**
LMC200	●	●	●	●				**IEC 90 Ø200 - Ø24x50**
LMC250	●	●	●	●	●			**IEC 100 Ø250 - Ø28x60**
LMC250	●	●	●	●	●			**IEC 112 Ø250 - Ø28x60**
LMC300			●	●	●	●		**IEC 132 Ø300 - Ø38x80**
LMC350			●	●	●	●		**IEC 160 Ø350 - Ø42x110**
LMC350			●	●	●	●	●	**IEC 180 Ø350 - Ø48x110**
LMC400			●	●	●	●	●	**IEC 200 Ø400 - Ø55x110**
LMC450			●	●	●	●	●	**IEC 225 Ø450 - Ø60x140**
LMC550					●	●	●	**IEC 250 Ø550 - Ø65x140**
LMC550					●	●	●	**IEC 280 Ø550 - Ø75x140**
LMC660					●	●	●	**IEC 315 Ø660 - Ø80x170**

Bell-Housing size	Flange SAE J 744										IEC Motors size
	50-2 (A-A)	82-2 (A)	101-2 (B)	127-2 (C)	152-2 (D)	165-2 (E)	101-4 (B)	127-4 (D)	152-4 (D)	165-4 (E)	
LMC200	●	●									**IEC 80 Ø200 - Ø19x40**
LMC200	●	●									**IEC 90 Ø200 - Ø24x50**
LMC250	●	●	●				●				**IEC 100 Ø250 - Ø28x60**
LMC250	●	●	●	●			●				**IEC 112 Ø250 - Ø28x60**
LMC300		●	●	●			●	●			**IEC 132 Ø300 - Ø38x80**
LMC350		●	●	●			●	●			**IEC 160 Ø350 - Ø42x110**
LMC350		●	●	●	●		●	●	●		**IEC 180 Ø350 - Ø48x110**
LMC400		●	●	●	●	●	●	●	●	●	**IEC 200 Ø400 - Ø55x110**
LMC450			●	●	●	●		●	●	●	**IEC 225 Ø450 - Ø60x140**
LMC550				●	●	●		●	●	●	**IEC 250 Ø550 - Ø65x140**
LMC550				●	●	●		●	●	●	**IEC 280 Ø550 - Ø75x140**
LMC660				●	●	●		●	●	●	**IEC 315 Ø660 - Ø80x170**

Designation & Ordering code

LMC

Configuration example: LMC200AFSJ | 070 | DI

Bell-Housing series and size

LMC200AFSJ	**LMC350AFSU**
LMC200AFSW	**LMC400AFSV**
LMC250AFSM	**LMC450AFSZ**
LMC250AFSQ	**LMC550AFSN**
LMC250AFSR	**LMC550AFSO**
LMC300AFST	**LMC660AFSP**
LMC300AFSX	**LMC660AFSS**
LMC350AFSY	

Pump interface codes

070	See page 60

Options

DI	Drain hole + inspection hole
FR	Holes rotated through 45° in relation to standard position
DP	Double set of hole
AN	Black anodized finish
SA	Clearance holes at motor interface
Pxx	Customer specification

LDC

Configuration example: LDC200AFRB | 070 | DI

Bell-Housing series and size

LDC200AFRB	**LDC350AF6B**
LDC200AFRC	**LDC400AF5A**
LDC200AFRD	**LDC400AF5B**
LDC250AFRC	**LDC400AF6A**
LDC300AFRC	**LDC400AF6B**
LDC300AF5A	**LDC450AF6A**
LDC300AF5B	**LDC450AF6B**
LDC350AF6A	

Pump interface codes

070	See page 60

Options

DI	Drain hole + inspection hole
FR	Holes rotated through 45° in relation to standard position
DP	Double set of hole
AN	Black anodized finish
SA	Clearance holes at motor interface
Pxx	Customer specification

Note:
- Bell-housings with DI options are supplied complete with threaded closure plug.
- For customization features other than those indicated on this page, contact MP Filtri Technical and Sales Department.

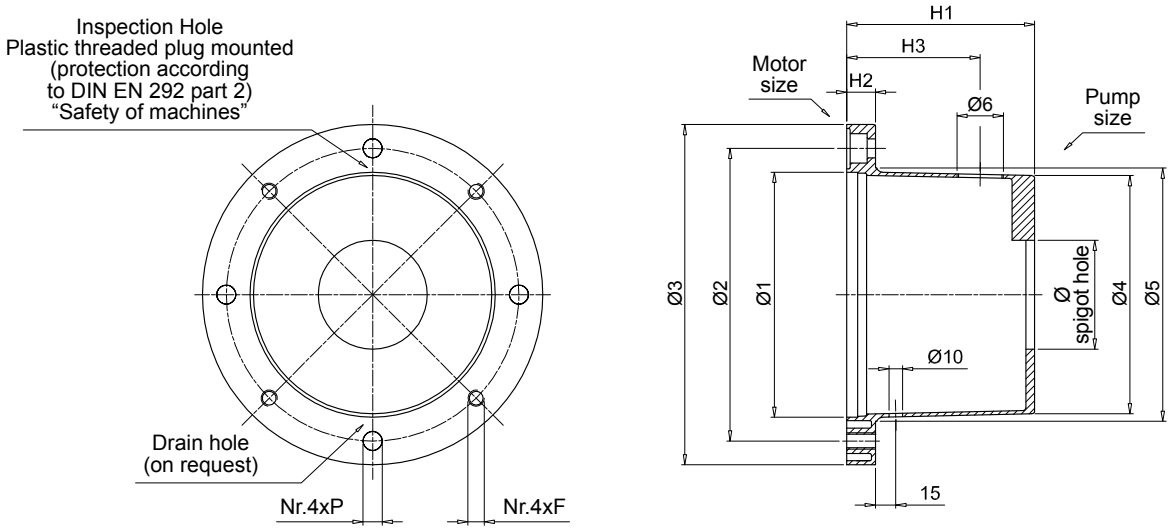

IEC - Electric motors Motor size	Shaft end [Ø x L]	Bell-housing code	Dimensions [mm] Ø1	Ø2	Ø3	Ø4	Ø5	H1	H2	F	P	On request H3	Ø6	Ø spigot hole Minimum [mm]	Weight [kg]
80	19x40	**LMC200AFSJ*****	130	165	200	125	135	100	18	M10	11	60	3/4"	50	0.75
90	24x50	**LMC200AFSW*****	130	165	200	125	135	125	18	M10	11	85	3/4"	50	0.95
110 - 112	28x60	**LMC250AFSM*****	180	215	250	175	186	114	19	M12	14	75	3/4"	50	1.50
		LMC250AFSQ***	180	215	250	175	186	138	19	M12	14	100	3/4"	50	1.60
		LMC250AFSR***	180	215	250	175	186	159	19	M12	14	120	3/4"	50	1.75
132	38x80	**LMC300AFST*****	230	265	300	230	235	155	23	M12	14	80	3/4"	80	3.20
		LMC300AFSX***	230	265	300	230	235	170	23	M12	14	95	3/4"	80	3.30
160	42x110	**LMC350AFSY*****	250	300	350	240	254	178	31	M16	18	95	1"	50	4.80
180	48x110	**LMC350AFSU*****	250	300	350	240	254	194	31	M16	18	115	1"	80	4.90
200	55x110	**LMC400AFSV*****	300	350	400	280	305	201	31	M16	18	125	1 1/2"	80	6.50

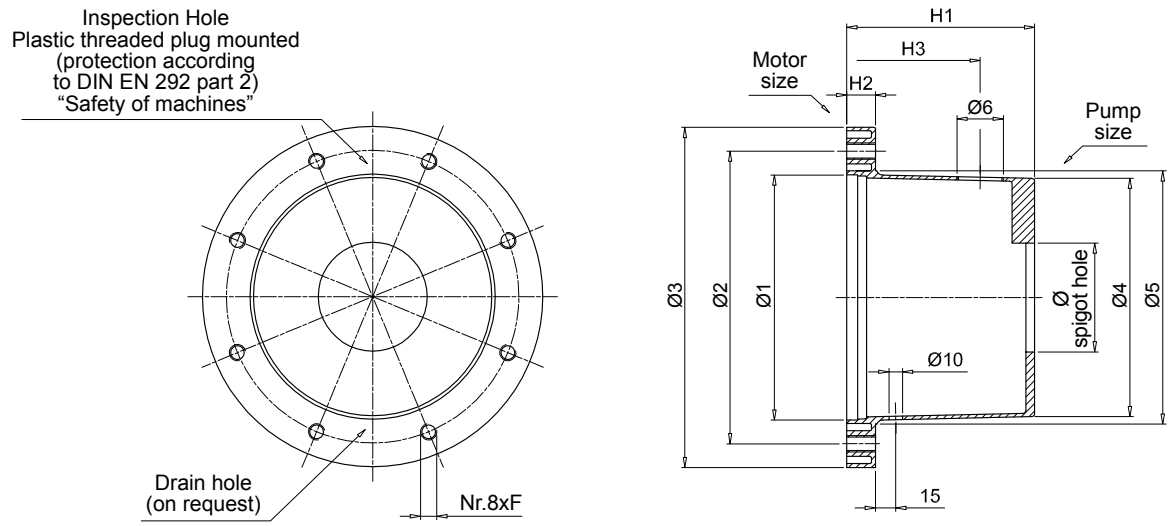

IEC - Electric motors Motor size	Shaft end [Ø x L]	Bell-housing code	Dimensions [mm] Ø1	Ø2	Ø3	Ø4	Ø5	H1	H2	F	P	On request H3	Ø6	Ø spigot hole Minimum [mm]	Weight [kg]
225	60x140	**LMC450AFSZ*****	350	400	450	320	350	250	31	M16	-	175	1 1/2"	80	9.00
250	65x140	**LMC550AFSN*****	450	500	550	-	-	265	31	M16	-	175	1 1/2"	100	15.00
280	75x140	**LMC550AFSO*****	450	500	550	-	-	310	35	M16	-	175	1 1/2"	100	17.00
315	80x170	**LMC660AFSP*****	550	600	660	-	-	295	45	M20	-	175	1 1/2"	100	27.00
		LMC660AFSS***	550	600	660	-	-	325	45	M20	-	175	1 1/2"	100	31.00

Dimensions

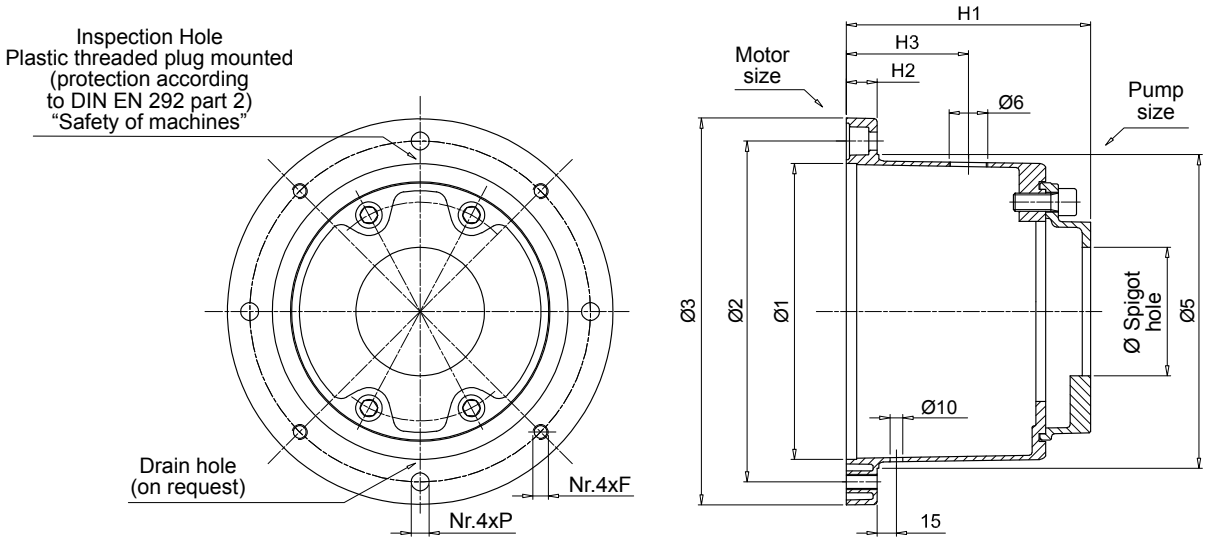

IEC - Electric motors		Bell-housing	Dimensions [mm]								On request		Ø spigot hole	Weight
Motor size	Shaft end [Ø x L]	code	Ø1	Ø2	Ø3	Ø5	H1	H2	F	P	H3	Ø6	Minimum [mm]	[kg]
80	19x40	**LDC200AFRB*****	130	165	200	135	125	18	M10	11	60	3/4"	50	1.85
90	24x50	**LDC200AFRC*****	130	165	200	135	133	18	M10	11	60	3/4"	50	1.95
		LDC200AFRD***	130	165	200	135	158	18	M10	11	75	3/4"	50	2.10
110 - 112	28x60	**LDC250AFRC*****	180	215	250	186	169	19	M12	14	100	3/4"	50	2.75
132	38x80	**LDC300AFRC*****	230	265	300	235	185	23	M12	14	95	3/4"	50	4.60
		LDC300AF5A***	230	265	300	235	190	23	M12	14	95	3/4"	80	4.50
		LDC300AF5B***	230	265	300	235	181	23	M12	14	95	3/4"	80	4.80
160	42x110	**LDC350AF6A*****	250	300	350	254	239	31	M16	18	115	1"	80	6.80
180	48x110	**LDC350AF6B*****	250	300	350	254	252	31	M16	18	115	1"	80	7.30
200	55x110	**LDC400AF5A*****	300	350	400	305	246	31	M16	18	125	1 1/2"	80	7.50
		LDC400AF5B***	300	350	400	305	234	31	M16	18	125	1 1/2"	80	7.90
		LDC400AF6A***	300	350	400	305	246	31	M16	18	125	1 1/2"	80	8.50
		LDC400AF6B***	300	350	400	305	260	31	M16	18	125	1 1/2"	80	9.00

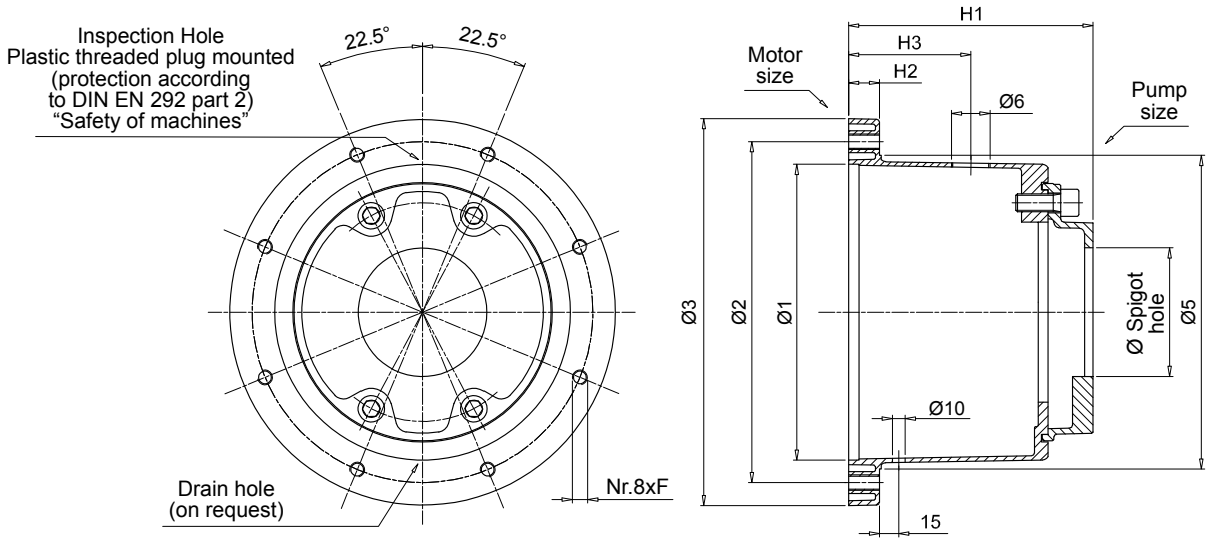

IEC - Electric motors		Bell-housing	Dimensions [mm]								On request		Ø spigot hole	Weight
Motor size	Shaft end [Ø x L]	code	Ø1	Ø2	Ø3	Ø5	H1	H2	F	P	H3	Ø6	Minimum [mm]	[kg]
225	60x140	**LDC450AF6A*** **	350	400	450	350	295	31	M16	-	175	1 1/2"	80	11.20
		LDC450AF6B* **	350	400	450	350	308	31	M16	-	175	1 1/2"	80	11.60

Comparative table

MP Filtri code	KTR code	OMT code	Raja code	Hydrapp code
LMC200A* **	PK200/3/...	TH20A***	R200/99-115/...	-
LMC200A* **	PL200/8/...	TH1***	R200/120-135/...	HLC1
LMC250A* **	PL250/6/...	TH2***	R250/120-135/...	HLC3
LMC300A* **	PL300/4/...	TH3***	R300/155-170/...	HLC5
LMC350A* **	PK350/4/...	TH4***	R350/173-194/...	HLC8
LMC400A* **	PK400/4/...	TH15***	R400/194-210/...	HLC12
LMC450A* **	PK450/4/...	TH18***	R450/250-210/...	-
LMC550A* **	PK550/4/...	TH19***	R550/250-210/...	-
LMC660A* **	PK660/4/...	TH20***	R660/250-210/...	-

Note:
The above table is gudeline only.
Not all Bell-Housings are fully interchangeble.