LMS/LDS series

IEC electric motor range from size 100 up to size 315

Bell-Housings & Couplings sizing

	p.
AUTOMATIC	11
MANUALLY	12

SOFTWARE FOR AUTOMATIC CALCULATION

The web-based software program will allow you to select the most suitable MP Filtri's Filters, in accordance with your process design requirements.

The program will automatically check your input design process prior to propose you the acceptable solutions and create an output in PDF report style format.

The MP Filtri Selection Tool software program is easy to use with a flexible fast design method and provides improved layout formats with full descriptions.

The web-based tool is available at MP Filtri website at following link:
https://www.mpfiltri.com/tools/

The related, complete user guide is available as Manual and downloadable from the "Download" section of MP Filtri website, as well as scanning the following QR code

Scan or click me!

BELL-HOUSINGS & COUPLINGS SIZING

A GUIDE TO SELECT THE CORRECT BELL-HOUSING AND DRIVE COUPLING MANUALLY

DATA REQUIRED

- Electric motor power/motor size
- Manufacturer and pump type

TO VERIFY:

1 - Pump and motor shaft dimensions (see electric motor data sheet)
2 - Shaft and flange pump (see pump data sheet)

Example:
- Electric motor 2.2 kW - size 100-112
- Atos pump code PFE31 - Shaft 1

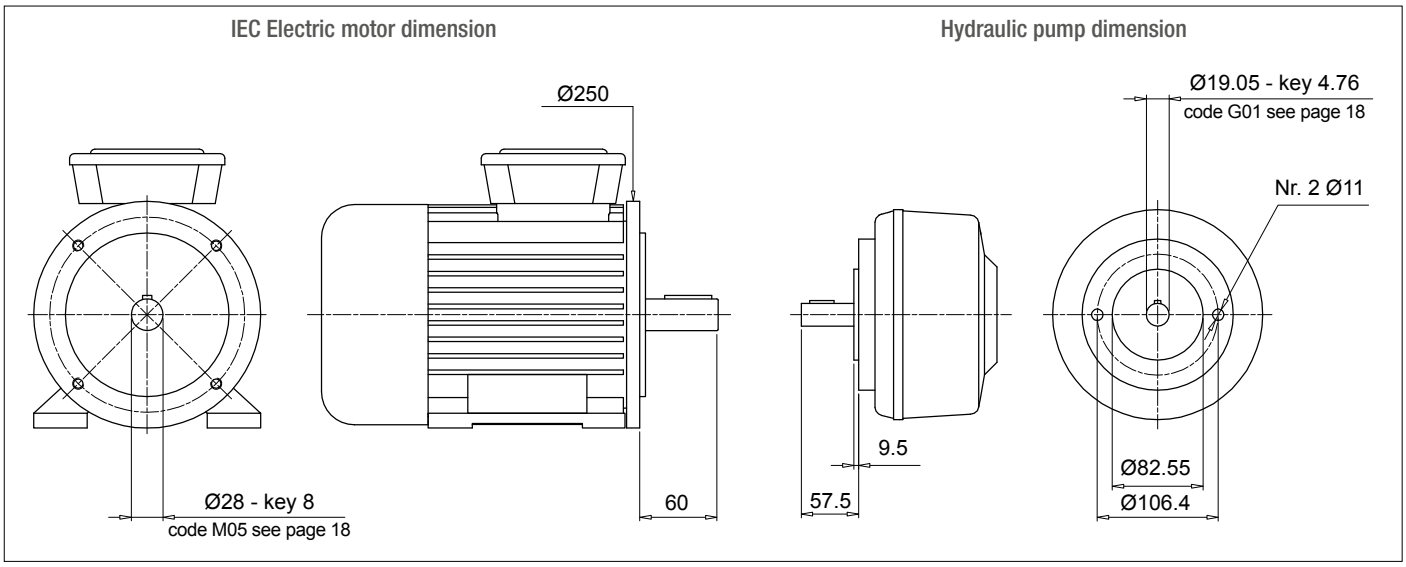

Bell-Housing's length calculation

- H = 60 + 18 + 57.5 = 135.5 mm (18 = Sp spider - see page 31)

- Choose type of bell-housing (LMC - LMS):
  For monobloc bell-housing LMC/LDC series see pages 75 ÷ 81
  For Low noise bell-housing LMS/LDS series see pages 81 ÷ 89
  For Multi-components 2-3 bell housing series see pages 91 ÷ 111

Note:
The length of bell-housing must be ≥ than the length calculated (135.5 mm)

Case A
Solution with monobloc bell-housing series **LMC/LDC**

Pages 75 ÷ 81 for IEC Electric motor size 100-112 - LMC250

LMC 250 bell-housing with height ≥ 135.5 - LMC250AFSQ

The bell-housing code must be completed with pump drilling code (see pages 60-61).
For the specific case:
Spigot hole 82.55 - PCD 106.4 - Nr.2 holes M10 : Drilling code 060

Definitive bell-housing code **LMC250AFSQ060**

Case B
Solution with low noise bell-housing series **LMS/LDS**

Pages 83 ÷ 89 for IEC Electric motor size 100-112 - LMS250

LMS 250 bell-housing with height ≥ 135.5 - LMS250AFSA

The bell-housing code must be completed with pump drilling code (see pages 60-61).
For the specific case:
Spigot hole 82.55 - PCD 106.4 - Nr.2 holes M10 : Drilling code 060

Definitive bell-housing code **LMS250AFSA060**

Coupling selection

Motor half-coupling (see page 26)
For IEC Electric motor size 100/112, the half-coupling is **SGEA21M05060**

Spider (see page 31)
For SGEA21, EGE2 - EGE2RR
(choose spider material on the base of the application, oil, temperature and cycle machine, etc.)

Pump half-coupling
Choose the drilling code - see pages 18-19 for shaft 19.05 - key 4.76 - code: **G01**

Pump half-coupling length = BH length - THK Spider - THK Spigot
LMC = 138 mm - 60 - 18 - 9.5 = 50.5 mm
LMS = 148 mm - 60 - 18 - 9.5 = 60.5 mm

LMC - Choose the half-coupling's length at page 26 ≤ 50.5 mm.
LMS - Choose the half-coupling's length at page 26 ≤ 60.5 mm.
LMC - Available length for SGEA21 = 50 mm
LMS - Available length for SGEA21 = 60 mm
Half coupling for LMC: **SGEA21G01050**
Half coupling for LMS: **SGEA21G01050**

Note: for multi pumps we recommend to use a specific support on the base of the pump's dimensions and weight.

Noise is a particularly pervasive problem so much so that there have been statutory regulations in place now for some years, designed to limit harmful occupational exposure.
Many of the machines used in industry today are equipped with oil-hydraulic systems, which happen to be a major source of noise.

1 THEORY AND DEFINITION OF NOISE

From a health and hygiene standpoint, noise can be defined as an unpleasant and undesirable sound, or an unpleasant and annoying or intolerable auditory sensation (noise being any sound phenomena that may be accompanied by sensations of disturbance and pain). By definition, acoustic phenomena are oscillatory in character, propagated in a flexible medium and causing pressure variations at the points, and the areas adjacent to those points, through which they pass.

2 SOUND

Technically considered, certain elements must be present simultaneously for acoustic phenomena to occur:

- Sound source
- Transmission medium
- Receive

The electric motor and the pump, together with the drive coupling, are the SOURCE OF THE NOISE. The Bell-housing is the noise transmission MEDIUM. Depending on whether the monobloc bell-housing is a rigid or low noise type, there will be variations in the flexible properties of the transmission medium. The acoustic phenomena are dissimilar in the two cases, given the differences in pressure variation and particle displacement.

MOTOR AND PUMP UNIT

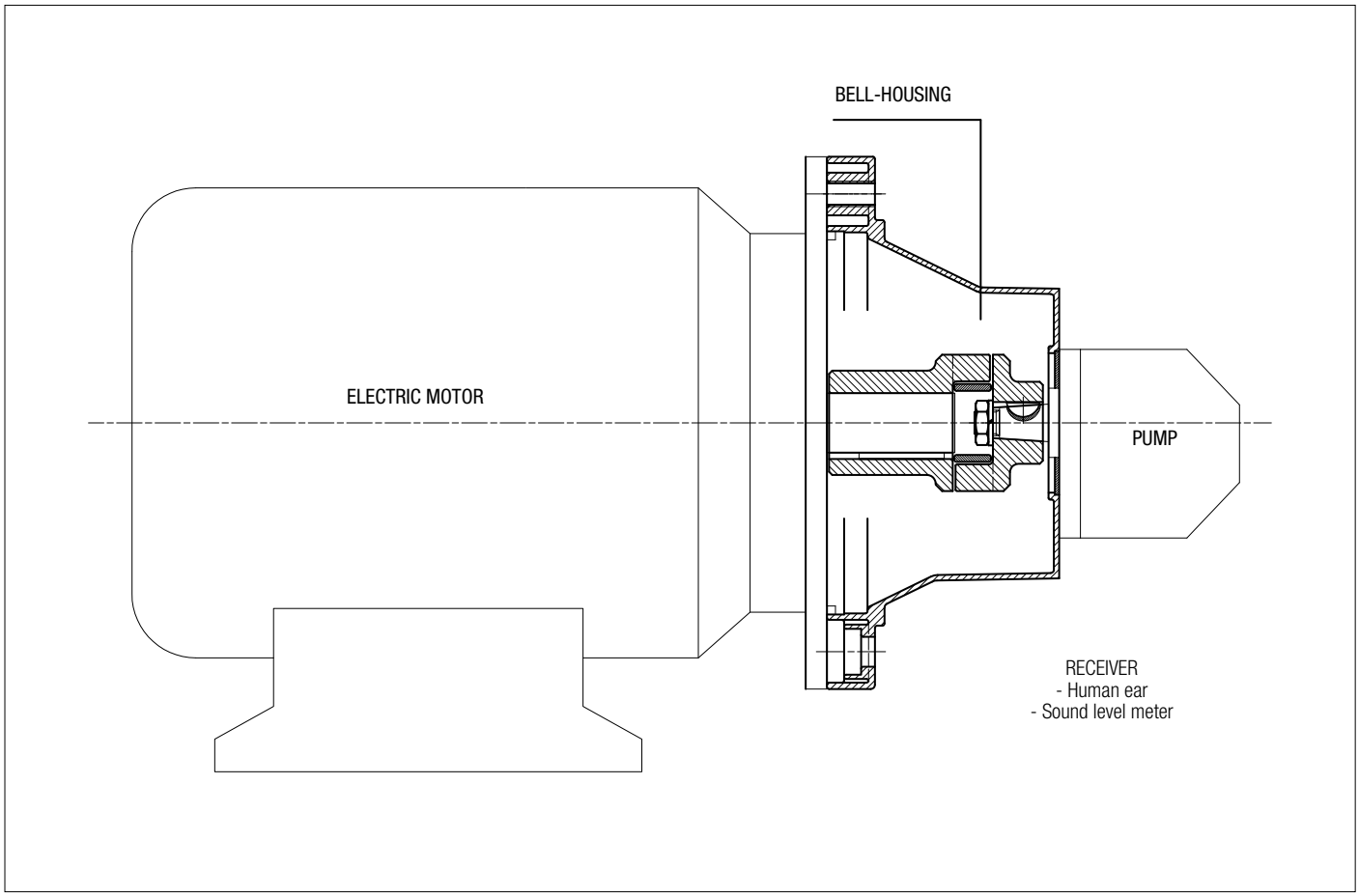

Low noise bell-housing will help to attenuate the transmission of vibrations and the emission of noise generated by the system.
Self-evidently, however, the mere adoption of a low noise bell-housing will achieve little unless the motor and pump are correctly installed on the machine or on the tank of the hydraulic power unit.

Should be followed in order to achieve best possible results and correct installation:

1 MOTOR AND PUMP UNIT MOUNTED HORIZONTALLY ON OIL TANK LID

- The suction pipe attached to the pump must be rigid and fitted using a resilient bulkhead flange of the FTA series, which helps to cushion the vibrations propagated between the pipe and the tank lid.
  If pipes need to be bent, the radius of curvature must be at least 3 times the pipe diameter.
  Do not use elbow fittings, as these will significantly increase pressure losses.

- The pressure pipeline of the pump must be flexible and long enough to include bends with the minimum radius of curvature recommended by the manufacturer for the specified operating pressure.

- The return pipeline running from the service to the filter must be flexible.
  Where oil is returned directly to the tank of the hydraulic power unit through a rigid pipe, it is advisable to use a resilient bulkhead flange of the FTR series, which helps to cushion the vibrations propagated between the pipe and the tank lid.

- Anti-vibration devices (resilient mounts or damping rods) must be located under the feet of the electric motor or the PDM foot brackets, depending on the mounting position of the motor.

- The lids of hydraulic oil tanks must be sturdy enough to support the load they carry.

2 MOTOR AND PUMP UNIT MOUNTED HORIZONTALLY ON MACHINE

- As a matter of good practice, the oil tank and motor-pump unit should be mounted on a single supporting frame of strength sufficient to support the load.

- If the hydraulic system is fitted with a side-mounted filter, the suction pipeline to the pump must be flexible and long enough to include bends with the minimum radius of curvature recommended by the manufacturer.

- If the suction filter is not side mounted, the pipeline should be rigid and installed in conjunction with a compensating coupling.

- The pressure pipeline of the pump must be flexible, and long enough to include bends with the minimum radius of curvature recommended by the manufacturer for the specified operating pressure.

- The return pipeline running from the service to the filter must be flexible.
  Where oil is returned directly to the tank of the hydraulic power unit through a rigid pipe, it is advisable to use a resilient bulkhead flange of the FTR series, which helps to cushion the vibrations propagated between the pipe and the tank lid.

- Anti-vibration devices (resilient mounts or damping rods) must be located under the feet of the electric motor or the PDM foot brackets, depending on the mounting position of the motor.

FINAL CONSIDERATION

For best results, in any event, the motor-and-pump unit should be incorporated into the hydraulic system in such a way that no one component is rigidly associated with another, resulting in the propagation of vibration, and consequently noise.

RECOMMENDED TIGHTENING TORQUES FOR MOTOR/PUMP FIXING ON THE BELL-HOUSING

M6	10 N·m	M16	205 N·m
M8	15 N·m	M18	280 N·m
M10	50 N·m	M20	400 N·m
M12	84 N·m	M22	530 N·m
M14	135 N·m	M24	690 N·m

Note: The above guidelines are indicative only and subordinate to the solutions adopted ultimately by design engineers.

Valid configuration for bell-housing up to Ø400

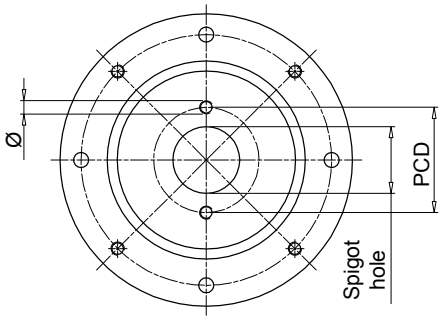

Bell-housing with nr. 2 holes at pump interface, aligned with through holes at motor interface.

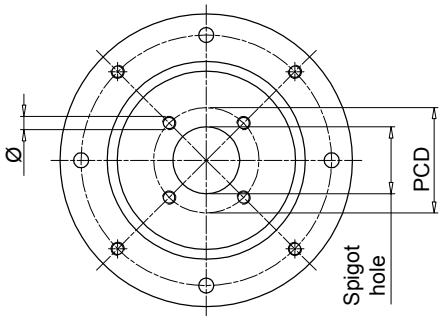

Bell-housing with nr. 4 holes at pump interface, aligned with thread holes at motor interface.

Valid configuration for bell-housing from Ø450 to Ø660

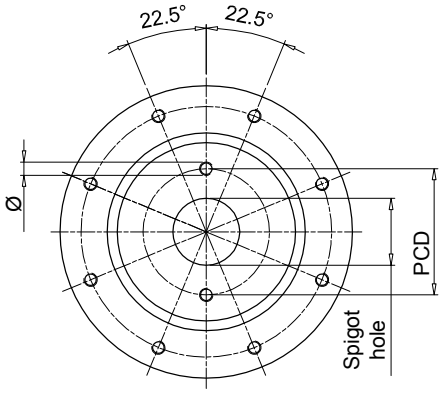

Bell-housing with nr. 2 holes at pump interface + 22.5° compared to through holes at motor interface.

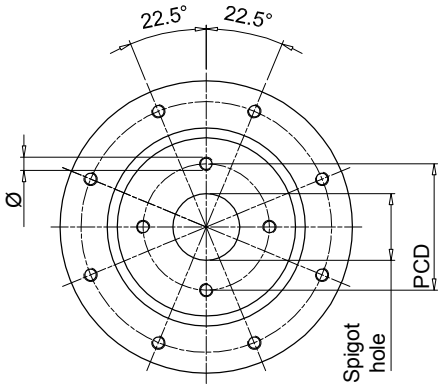

Bell-housing with nr. 4 holes at pump interface + 22.5° compared to thread holes at motor interface.

Spigot hole [mm]	PCD	Ø	Nr. holes	Code	Type
40	72.00	M8	2	**191**	-
45.2	88.90	M8	4	**096**	-
	71.80	M8	4	**120**	-
50	80.00	M8	2	**052**	ISO3019-2-50-B2
	93.00	M10	2	**053**	-
	60.00	M5	4	**280**	-
	63.00	Ø7	4	**057**	-
	93.00	M8	2	**287**	-
50.8	82.50	M8	2	**050**	SAE A-A 50-2
56	76.00	M6	4	**234**	-
57.15	106.40	Ø11	2	**212**	-
60	74.00	M10	4	**098**	-
	98.50	M6	4	**147**	-
	75.00	M6	4	**227**	-
62.7	157.20	M12	4	**231**	-
63	100.00	M8	2	**042**	ISO3019-2-63-B2
	125.00	M6	4	**043**	-
	85.00	M8	4	**044**	-
	80.00	M8	2	**051**	-
	80.00	Ø8.5	4	**058**	-
	100.00	M10	2	**062**	-
	82.00	M8	4	**168**	ISO3019-2-63-B4
	90.00	M8	4	**271**	-
65	90.00	M8	4	**073**	-
70	84.00	Ø7	4	**289**	-
71.8	88.90	M10	4	**047**	-
75	102.00	M10	4	**139**	-
80	100.00	M8	4	**024**	ISO3019-2-80-B4
	103.20	M8	2	**045**	ISO3019-2-80-B2
	100.00	Ø11	4	**059**	-
	100.00	M10	2	**061**	-
	110.00	M10	2	**063**	-
	140.00	M10	2	**064**	-
	115.00	M10	2	**065**	-
	100.00	M10	4	**067**	-
	106.40	M10	2	**083**	-
	130.00	M8	4	**087**	-
	100.00	Ø8.5	4	**093**	-
	113.00	M12	4	**104**	-
	95.00	M8	4	**169**	-
	103.00	M8	4	**242**	-
	110.00	M10	4	**272**	-
82.55	106.40	M10	2	**060**	SAE A 82-2
	105.00	M10	4	**097**	-
	106.40	M8	2	**254**	-
	146.00	M12	2	**260**	-
	110.00	M10	2	**284**	-
85	106.40	M10	2	**066**	-
90	112.00	M8	2	**134**	-
	105.00	M8	4	**156**	-
	118.00	Ø9	2	**163**	-
	112.00	Ø9	2	**164**	-
92	140.00	M8	4	**088**	-
	145.00	M10	4	**089**	-

"-": configuration out of ISO & SAE Standard

Spigot hole [mm]	PCD	Ø	Nr. holes	Code	Type
95	115.00	M8	4	**137**	-
	127.00	M10	4	**131**	-
98.4	125.00	Ø11	4	**128**	-
100	125.00	M10	2	**023**	ISO3019-2-100-B4
	125.00	M10	4	**025**	ISO3019-2-100-B2
	125.00	Ø11	4	**031**	-
	125.00	M5	4	**032**	-
	190.00	Ø15	4	**038**	-
	125.00	Ø13	4	**041**	-
	125.00	M12	2	**071**	-
	140.00	M12	2	**072**	-
	146.00	M12	2	**075**	-
	126.00	M10	2	**106**	-
	120.00	M8	4	**122**	-
	160.00	M10	4	**141**	-
	150.00	M10	4	**150**	-
101.6	161.50	M12	4	**029**	-
	146.00	M12	2	**070**	SAE B 101-2
	127.00	M12	4	**125**	-
	146.00	M10	2	**159**	-
	127.00	M10	4	**224**	-
105	146.00	M12	2	**076**	-
110	175.00	M10	4	**110**	-
	130.00	M8	4	**154**	-
	200.00	M10	4	**202**	-
	135.00	M10	4	**219**	-
	145.00	M12	4	**273**	-
112	140.00	M12	2	**074**	-
	140.00	M10	2	**138**	-
	130.00	M10	4	**264**	-
115	180.00	M12	4	**198**	-
116	160.00	M14	2	**084**	-
120	210.00	M16	2	**094**	-
	145.00	M10	4	**155**	-
	150.00	Ø13	4	**267**	-
125	160.00	M12	4	**026**	ISO3019-2-125-B4
	160.00	Ø13	4	**033**	-
	160.00	M12	2	**079**	-
	180.00	M16	2	**082**	ISO3019-2-125-B2
	155.00	M10	4	**102**	-
	160.00	Ø17	4	**113**	-
	200.00	M12	4	**114**	-
	181.20	M16	2	**136**	-
	200.00	M16	4	**200**	-
	180.00	ø20	4	**215**	-
	170.00	ø18	4	**237**	-
127	161.50	M12	4	**021**	-
	181.20	M16	2	**080**	SAE C 127-2
	161.50	M14	4	**140**	-
130	165.00	Ø11	4	**054**	-
	150.00	M12	4	**068**	-
	181.20	M16	2	**085**	-
	165.00	M12	4	**124**	-
	165.00	M14	4	**135**	-

"-": configuration out of ISO & SAE Standard

Spigot hole [mm]	PCD	Ø	Nr. holes	Code	Type
130	165.00	M10	4	**253**	-
135	160.00	M10	4	**151**	-
	175.40	M12	4	**220**	-
140	180.00	M14	4	**077**	ISO3019-2-140-B4
	180.00	M12	2	**081**	-
	165.00	M10	4	**157**	-
	200.00	M16	4	**176**	ISO3019-2-140-B2
	165.00	Ø11	4	**223**	-
	180.00	M16	2	**232**	-
150	185.00	M16	4	**069**	-
152.4	228.60	M16	4	**022**	-
	228.60	M18	2	**090**	-
	228.60	M18	4	**108**	-
	217.50	Ø17	4	**118**	-
	228.60	M20	2	**166**	SAE D 152-2
	228.60	M20	4	**192**	SAE D 152 -4
	190.50	M8	4	**207**	-
160	200.00	M16	4	**027**	ISO3019 - 2 -160 B4
	200.00	Ø17	4	**035**	-
	200.00	M16	2	**091**	-
	224.00	M20	2	**092**	ISO3019 - 2 -160 B2
	200.00	M12	2	**107**	-
	230.00	M22	4	**111**	-
	185.00	M12	4	**152**	-
	224.00	M16	4	**184**	-
	230.00	Ø22	4	**228**	-
162	188.00	M12	4	**263**	-
165.1	317.35	M20	4	**143**	SAE E 165 - 4
	317.35	M24	2	**145**	SAE E 165 - 2
	229.00	M20	4	**201**	-
	317.35	M18	4	**204**	-
175	200.00	M12	4	**153**	-
	230.00	M18	2	**185**	-
177.8	350.00	M24	4	**146**	SAE F 177 - 4
	216.00	M12	4	**222**	-
	350.00	M24	2	**203**	SAE F 177 - 2
180	216.00	Ø13	4	**055**	-
	216.00	M16	4	**078**	-
	224.00	M16	4	**112**	ISO3019 - 2 -180 B4
	216.00	M12	4	**132**	-
	215.00	M22	4	**148**	-
	230.00	M22	4	**226**	-
200	250.00	M20	4	**028**	ISO3019 - 2 -200 B4
	250.00	Ø22	4	**095**	-
	280.00	M24	2	**117**	-
	230.50	M12	4	**214**	-
203.2	254.00	M14	4	**210**	-
205	240.00	M16	4	**133**	-
224	280.00	M20	4	**144**	ISO3019 - 2 -224 B4
	280.00	Ø22	4	**205**	-
250	310.00	M24	4	**238**	-
	315.00	M20	4	**282**	ISO3019 - 2 -250 B4
275	355.00	M16	4	**233**	-
	355.00	Ø18	4	**281**	-

"-": configuration out of ISO & SAE Standard

Technical data

Bell-Housing - IEC electric motor range from size 100 up to size 315

Materials
- Motor base bell-housing: Pressure die-cast aluminium alloy
- Pump flange: Pressure die-cast aluminium alloy
- Internal ring: Pressure die-cast aluminium alloy
- Damping ring: Vulcanized aluminium + NBR 75 Shore A

Compatibility with fluids
Modular bell-housing components compatible for use with:
- Mineral oils types HH-HL-HM-HR-HV, to ISO 6743/4 standard
- Water based emulsions types HFAE-HFAS, to ISO 6743/4 standard
- Water glycol type HFC, to ISO 6743/4 standard: ask for anodized version

Special Applications
Any applications not covered by the normal indications contained in this catalogue must be evaluated and approved by MP Filtri Technical and Sales Department

Temperature
From -30 °C to +80 °C

Note
For temperatures outside this range, contact MP Filtri Technical and Sales Department

Range

Bell-Housing size	Flange ISO 3019-2							IEC Motors size
	50 B2-B4	63 B2-B4	80 B2-B4	100 B2-B4	125 B2-B4	160 B2-B4	200 B2-B4	
LMS250	●	●	●	●	●			**IEC 100 Ø250 - Ø28x60**
LMS250	●	●	●	●	●			**IEC 112 Ø250 - Ø28x60**
LMS300			●	●	●	●		**IEC 132 Ø300 - Ø38x80**
LMS350			●	●	●	●		**IEC 160 Ø350 - Ø42x110**
LMS350			●	●	●	●	●	**IEC 180 Ø350 - Ø48x110**
LMS400			●	●	●	●	●	**IEC 200 Ø400 - Ø55x110**
LMS450			●	●	●	●	●	**IEC 225 Ø450 - Ø60x140**
LMS550					●	●	●	**IEC 250 Ø550 - Ø65x140**
LMS550					●	●	●	**IEC 280 Ø550 - Ø75x140**
LMS660					●	●	●	**IEC 315 Ø660 - Ø80x170**

Bell-Housing size	Flange SAE J 744										IEC Motors size
	50-2 (A-A)	82-2 (A)	101-2 (B)	127-2 (C)	152-2 (D)	165-2 (E)	101-4 (B)	127-4 (D)	152-4 (D)	165-4 (E)	
LMS250	●	●	●				●				**IEC 100 Ø250 - Ø28x60**
LMS250	●	●	●	●			●				**IEC 112 Ø250 - Ø28x60**
LMS300		●	●	●			●	●			**IEC 132 Ø300 - Ø38x80**
LMS350		●	●	●			●	●			**IEC 160 Ø350 - Ø42x110**
LMS350		●	●	●	●		●	●	●		**IEC 180 Ø350 - Ø48x110**
LMS400		●	●	●	●	●	●	●	●	●	**IEC 200 Ø400 - Ø55x110**
LMS450			●	●	●	●		●	●	●	**IEC 225 Ø450 - Ø60x140**
LMS550				●	●	●		●	●	●	**IEC 250 Ø550 - Ø65x140**
LMS550				●	●	●		●	●	●	**IEC 280 Ø550 - Ø75x140**
LMS660				●	●	●		●	●	●	**IEC 315 Ø660 - Ø80x170**

LMS/LDS

Designation & Ordering code

LMS

Configuration example: LMS250AFSA | 070 | DI

Bell-Housing series and size

LMS250AFSA	**LMS400AFSL**
LMS250AFSB	**LMS400AFSM**
LMS300AFSC	**LMS400AFSN**
LMS300AFSD	**LMS450AFSO**
LMS300AFSE	**LMS550AFSP**
LMS350AFSF	**LMS550AFSR**
LMS350AFSG	**LMS660AFST**
LMS350AFSH	

Pump interface codes

070	See page 60

Options

DI	Drain hole + inspection hole
FR	Holes rotated through 45° in relation to standard position
DP	Double set of hole
AN	Black anodized finish
SA	Clearance holes at motor interface
Pxx	Customer specification

LDS

Configuration example: LDS250AFRA | 070 | DI

Bell-Housing series and size

LDS250AFRA	**LDS450AF6A**
LDS250AFBB	**LDS550AF6A**
LDS250AFRE	**LDS660AF6A**
LDS300AFRB	
LDS300AFRC	
LDS300AF5G	
LDS350AF5A	
LDS400AF6A	

Pump interface codes

070	See page 60

Options

DI	Drain hole + inspection hole
FR	Holes rotated through 45° in relation to standard position
DP	Double set of hole
AN	Black anodized finish
SA	Clearance holes at motor interface
Pxx	Customer specification

Note:
- Bell-Housings with DI options are supplied complete with threaded closure plug.
- For customization features other than those indicated on this page, contact MP Filtri Technical and Sales Department.

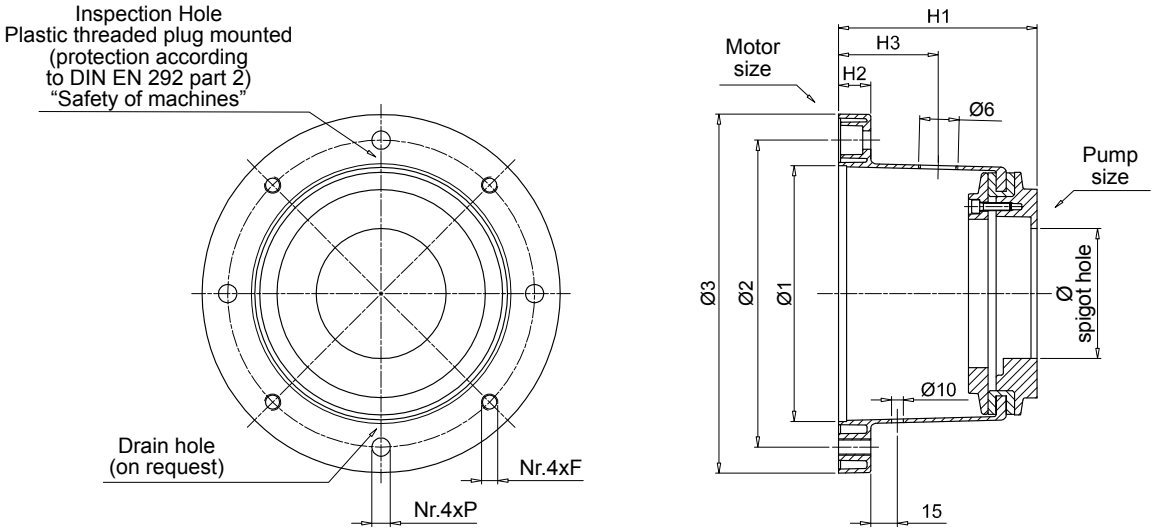

IEC - Electric motors Motor size	Shaft end [Ø x L]	Bell-housing code	Dimensions [mm] Ø1	Ø2	Ø3	H1	H2	F	P	On request H3	Ø6	Ø spigot hole Minimum [mm]	Weight [kg]
100 - 112	28x60	**LMS250AFSA*****	180	215	250	128	19	M12	14	75	3/4"	50	3.72
		LMS250AFSB***	180	215	250	148	19	M12	14	75	3/4"	50	4.10
132	38x80	**LMS300AFSC*****	230	265	300	155	23	M12	14	80	3/4"	50	4.20
		LMS300AFSD***	230	265	300	168	23	M12	14	80	3/4"	80	4.45
		LMS300AFSE***	230	265	300	194	23	M12	14	80	3/4"	80	6.51
160	42x110	**LMS350AFSF*****	250	300	350	204	31	M16	18	95	1"	80	6.80
180	48x110	**LMS350AFSG*****	250	300	350	228	31	M16	18	95	1"	80	7.10
		LMS350AFSH***	250	300	350	204	31	M16	18	95	1"	80	8.51
200	55x110	**LMS400AFSL*****	300	350	400	228	31	M16	18	125	1 1/2"	80	8.80
		LMS400AFSM***	300	350	400	256	31	M16	18	125	1 1/2"	80	9.10
		LMS400AFSN***	300	350	400	240	31	M16	18	125	1 1/2"	80	11.61

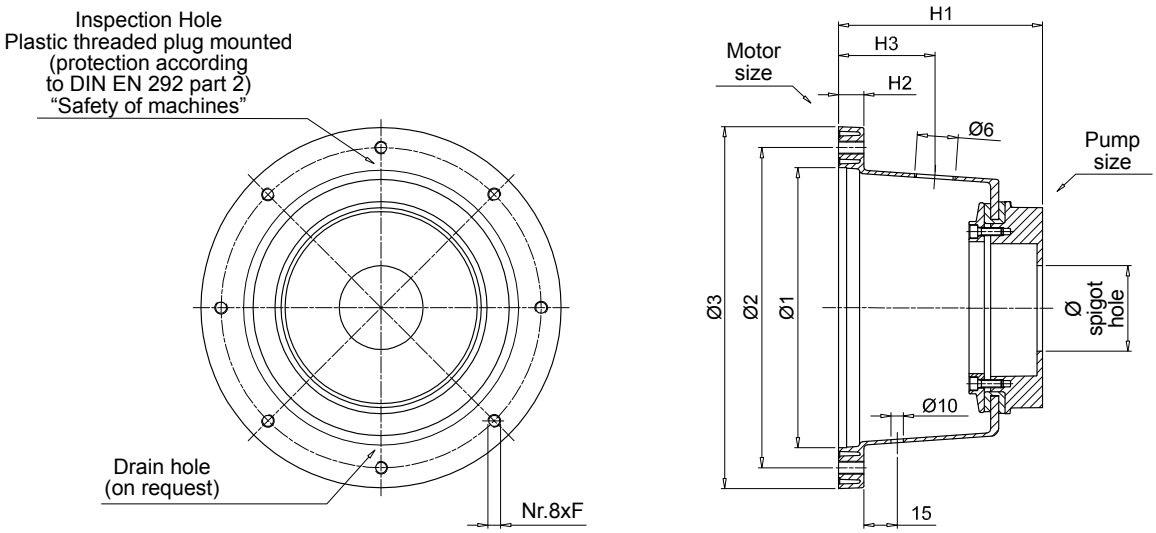

IEC - Electric motors Motor size	Shaft end [Ø x L]	Bell-housing code	Dimensions [mm] Ø1	Ø2	Ø3	H1	H2	F	P	On request H3	Ø6	Ø spigot hole Minimum [mm]	Weight [kg]
225	60x140	**LMS450AFSO*****	350	400	450	255	31	M16	-	175	1 1/2"	80	12.1
250	65x140	**LMS550AFSP*****	450	500	550	255	31	M16	-	176	1 1/2"	80	15.2
280	75x140	**LMS550AFSR*****	450	500	550	270	31	M16	-	177	1 1/2"	80	15.9
315	80x170	**LMS660AFST*****	550	600	660	305	42	M20	-	179	1 1/2"	80	20.2

Dimensions

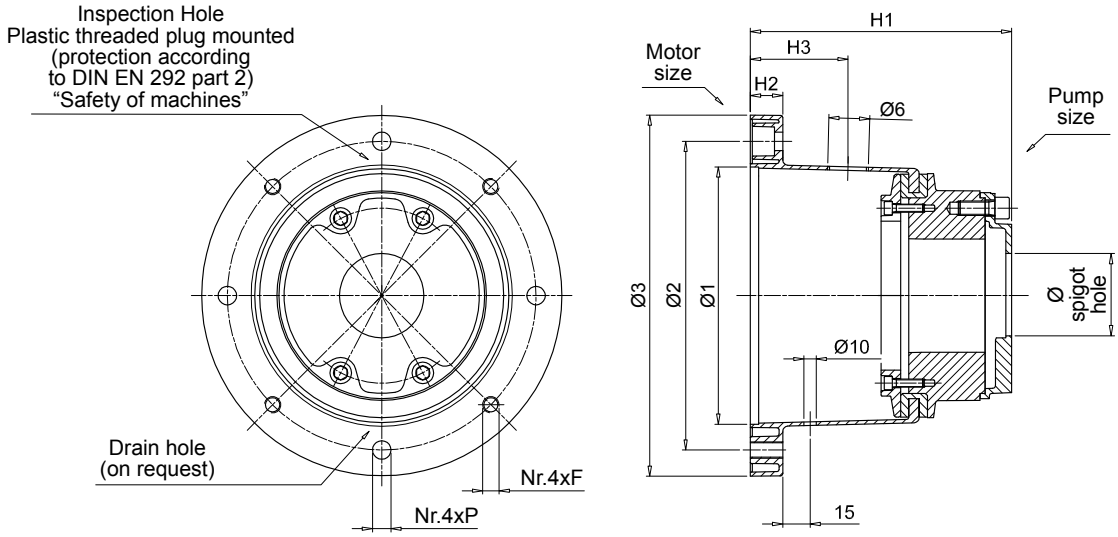

IEC - Electric motors		Bell-housing	Dimensions [mm]							On request		Ø spigot hole	Weight
Motor size	Shaft end [Ø x L]	code	Ø1	Ø2	Ø3	H1	H2	F	P	H3	Ø6	Minimum [mm]	[kg]
100 - 112	28x60	**LDS250AFRA*****	180	215	250	158	19	M12	14	75	3/4"	50	3.97
		LDS250AFRB***	180	215	250	165	19	M12	14	75	3/4"	50	4.10
		LDS250AFRE***	180	215	250	173	19	M12	14	75	3/4"	50	4.70
132	38x80	**LDS300AFRB*****	230	265	300	185	23	M12	14	80	3/4"	50	4.75
		LDS300AFRC***	230	265	300	188	23	M12	14	80	3/4"	80	4.85
		LDS300AF5G***	230	265	300	232	23	M12	14	80	3/4"	80	6.70
160 180	42x110 48x110	**LDS350AF5A*****	250	300	350	254	31	M16	18	95	1"	80	8.10
200	55x110	**LDS400AF6A*****	300	350	400	288	31	M16	18	125	1 1/2"	80	10.00

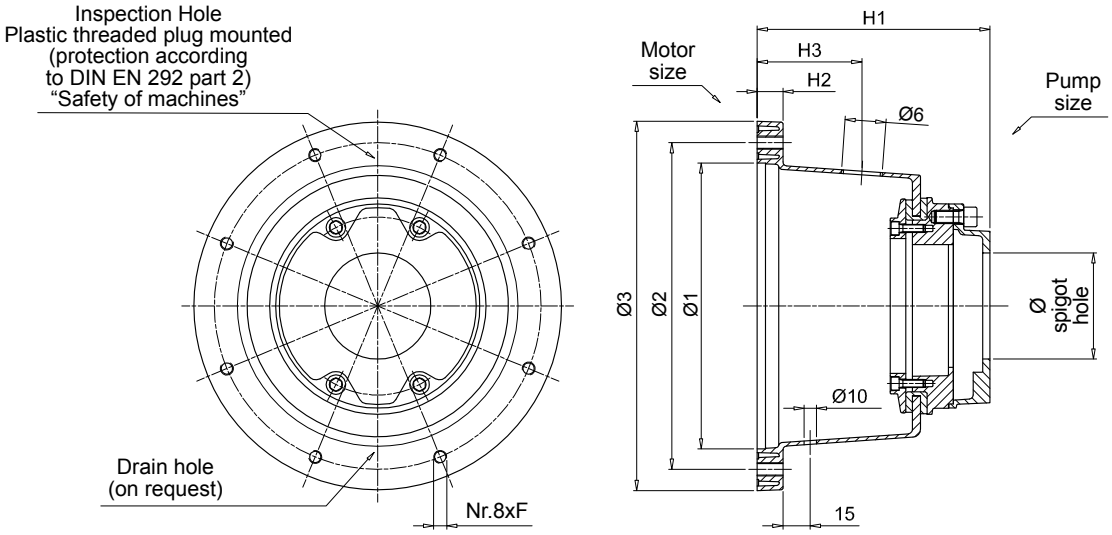

IEC - Electric motors Motor size	Shaft end [Ø x L]	Bell-housing code	Dimensions Ø1	Ø2	Ø3	H1	H2	F	P	On request H3	Ø6	Ø spigot hole Minimum [mm]	Weight [kg]
225	60x140	**LDS450AF6A*****	350	400	450	287	31	M16	-	175	1 1/2"	80	14.10
250 280	65x140 75x140	**LDS550AF6A*****	450	500	550	300	31	M16	-	176	1 1/2"	80	17.20
315	80x170	**LDS660AF6A*****	550	600	660	335	42	M20	-	179	1 1/2"	80	23.00

Comparative table

MP Filtri code	KTR code	OMT code	Raja code
LMS250A***	PK+D150/190	BS251***	R250***DF
LMS300A***	PK+D150/190	BS300***	R300***DF
LMS350A***	PK+D150/D190/D230/260	BS350***	R350***DF
LMS400A***	PK+/D190/D230/260	BS400***	R400***DF
LMS450A***	PK+/D190/D230/260D/D330	BS451***	R450***DF
LMS550A***	PK+/D190/D230/260D/D330	BS551***	R550***DF
LMS660A***	PK+/D190/D230/260D/D330	BS661***	R660***DF

Note:
The above table is guideline only.
Not all Bell-Housings are fully interchangeable.